PRO-ACTIVE TURNAROUND FLUSHING SERVICES PROVIDE FRESH START FOR C1100/C1200 COMPRESSOR

By Larry B. Jordan, Sr. Technical Advisor, RIG

Case Study

SYNOPSIS

As a proactive measure, BASF and RIG decided to perform a flush on a compressor whose last service date was unknown. RIG performed high velocity hot oil flushing (HVOF) of the piping for the C-1100 / C-1200 recycle gas/air compressor lube oil system, reservoir cleaning, and filter fill reservoir with virgin oil at the completion of the project. The scope of work ensured the lube oil piping met API 614 standards and the lube oil met the specified ISO 4406 of 16/14/11 or better.

GLOBAL LEADERS

IN PLANT LUBRICATION MAINTENANCE

RIG's 700 GPM Mobil Flushing Unit Includes Variable Frequency Drive, Heat & Filtration

Exxon Mobil and MobilServ℠/RIG—We stand with those who make the world work!

PROJECT OVERVIEW

A separate compressor in the same facility had recently shown severe lubricant contamination. Even though the lubricant for the compressor in question was not testing at critical contamination levels, BASF decided to proactively take advantage of downtime during a turnaround to perform lube oil flushing.

Reliable Industrial Group (RIG) was asked to perform the flush, providing experienced personnel, equipment and materials needed for flushing the complete lube oil piping for the C-1100 / C-1200 recycle gas/air compressors.

PROCEDURE

Prior to arriving on site RIG developed the specific process and procedure, materials list, and marked P&ID's showing flow path utilized during the flush. In addition, RIG's crews attended safety training at the local safety council to obtain badging.

RIG's service included: high velocity hot oil flushing (HVOF) of the piping for the C-1100 / C-1200 recycle gas/air compressors lube oil system, reservoir cleaning, and filter fill the reservoir with virgin oil at the completion of the project. The scope of work ensured the lube oil piping met API 614 standards and the lube oil met the specified ISO 4406 of 16/14/11 or better.

CONCLUSION

While the RIG team did not see any visible signs of varnish or metal deposits during the flushing activities that would point to past mechanical failure or oil oxidation, the compressor lube oil did need to be services. The C-1100 / C-1200 lube oil system showed a level of contamination equivalent to a system that is flushed during 4-6 year major turnarounds.

The high velocity oil flushing removed foreign materials commonly found during flushing activities executed during major turnarounds as preventative maintenance. BASF's proactive approach of utilizing RIG to

high velocity oil flush the system, clean the reservoir and filter fill virgin oil allowed the lubrication system to set a new "base line" for the C-1100 / C-1200 compressor in 2019.

This base line can be utilized for condition base lubrication analysis and scheduled maintenance moving forward. Regular lube oil testing and condition monitoring are recommended strategies for ensuring contamination levels are below ISO recommendations, which reduces mechanical wear and tear on compressor internals.

Example of Flush Flow Path Marked on the P&ID's

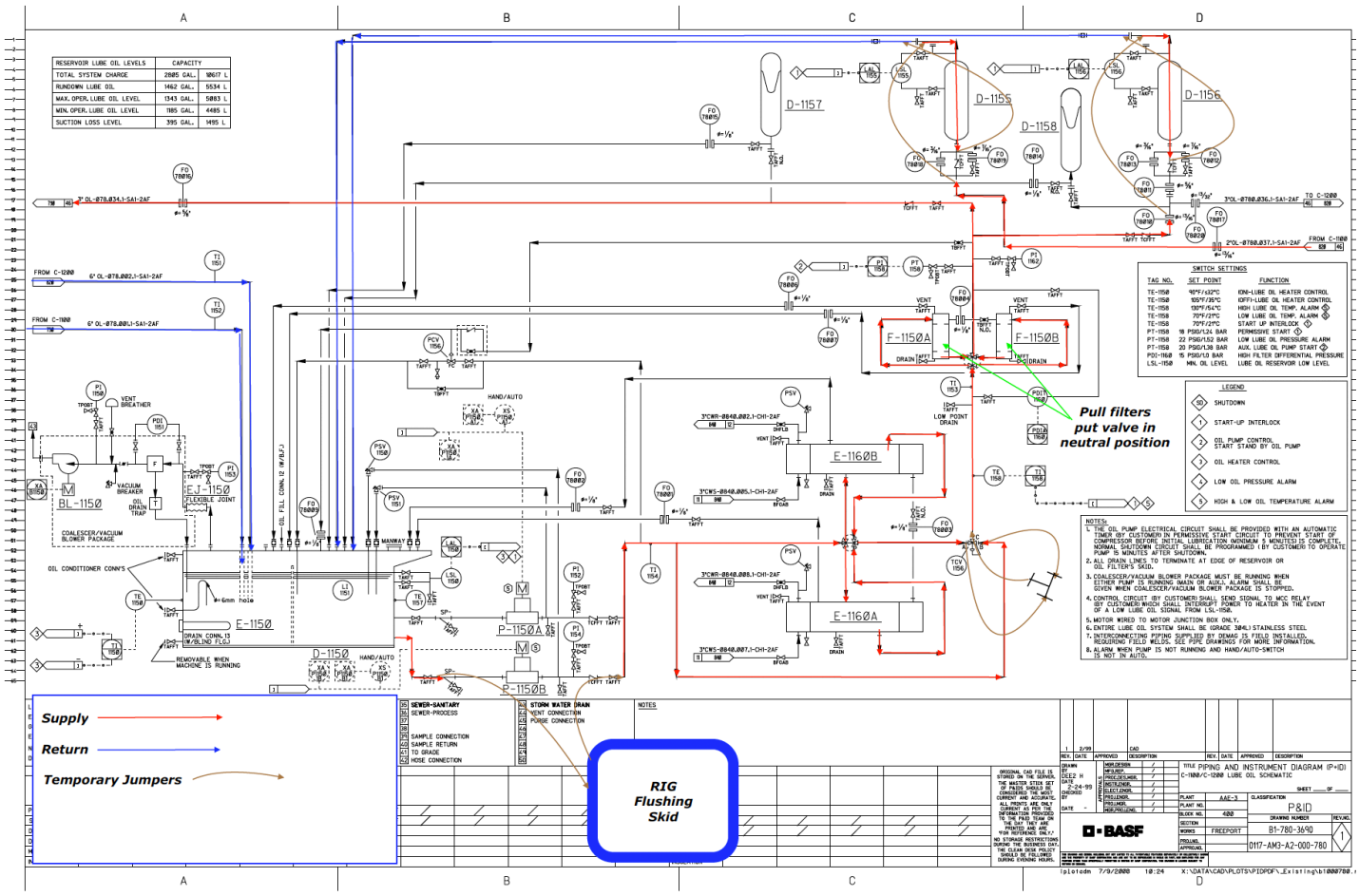

Figure 1. Example of Flush Flow Path Marked on P&ID's

Oil Analysis Final Fill:

RIG RELIABLE INDUSTRIAL GROUP™

Machine Condition	NORMAL
Lubricant Condition	NORMAL

Machine Name: New Oil - Final Fill
Machine ID: BASF - C-110 C-1200 Compressor

Analysis Report

Component Information			Sample Information		Customer Information	
Machine Type:	Compressor	Sump Size: Unknown	Received:	01/18/2019	PetrolinkUSA, LLC	
Lubricant:	MOBIL/DTE MEDIUM 46		Report:	01/18/2019	3021 E. Fourth Ave.	
Machine MFG:	UNKNOWN		Sample No.:	3166 - 1 - 448 - 1	Columbus, OH 43219	
Machine MOD:			Analyst/Test:	DMG / PARKF	Contact:	Roger Player

PROBLEMS No problems found with current sample.

COMMENTS The results for this sample indicate normal conditions. Please continue scheduled sampling.

CUSTOMER NOTES

Date Sampled		NEW OIL	1/17/2019				
Lab No		1009718	2435040				
Machine / Lube Cond.			N / N				
ELEMENTAL SPECTROSCOPY (ppm) ASTM D5185 Mod (-) indicates below detection limit							
Wear Metals	Iron	-	-				
	Copper	-	-				
	Lead	-	-				
	Aluminum	-	-				
	Tin	-	-				
	Nickel	-	-				
	Chromium	-	-				
	Titanium	-	-				
	Vanadium	-	-				
	Silver	-	-				
Additives	Calcium	-	-				
	Magnesium	-	-				
	Phosphorus	105	133				
	Zinc	89	97				
	Barium	-	-				
	Molybdenum	-	-				
Contaminants	Silicon	-	-				
	Boron	-	-				
	Lithium		-				
	Sodium	-	-				
	Potassium	-	-				
PARTICLE COUNT (particles per ml) ISO 4406:99							
Pore Block Particle Count Alarm Limits Marginal (21/18/15)							
Pore Block ISO Code		16/14/11	14/13/9				
>4 Micron		385	134				
>6 Micron		150	52				
>14 Micron		11	4				
>50 Micron		0	0				
>100 Micron		0	0				
VISCOSITY (centistokes) ASTM D445 MOD							
Viscosity@40°C		43.2	48.3				
ACID NUMBER (mg KOH/g) ASTM D974 MOD							
Acid Number		0.17	0.18				
WATER (PPM) a-ASTM D6304C b-IWI-134* c-Crackle d-IWI-135* e-IWI-370*							
Water			23 (a)				

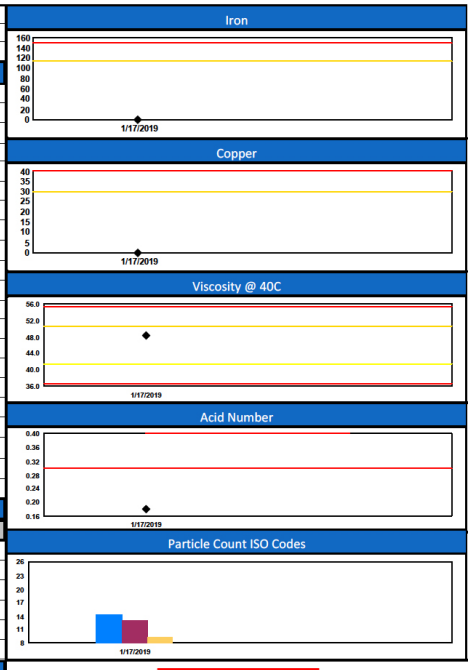

14/13/9
134
52
4
0
0

Testing performed by Insight Services®. This test is accredited under the laboratory's ISO/IEC 17025 accreditation issued by the ANSI-ASQ National Accreditation Board. Refer to certificate and scope of accreditation L2221. (e) -Estimated sample date. (*) - Not in scope of accreditation. PetrolinkUSA, LLC assumes sole responsibility for the application of and reliance upon results and recommendations reported by TestOil, whose obligation is limited to good faith performance.

Page 1 of 1 TestOil - 20338 Progress Drive - Strongsville, OH 44149 216-251-2510 www.testoil.com Lab No. 2435040

Figure 2. Oil Analysis Final Fill Report